CD150M Technical Specification

Standard pump material specification

Pump Casing / Separation Tank	Impeller	Wear Plates	Shaft	Engine Adaptor	NRV Body	Ball & Seat	Mechanical Seal	Pump End Bearing	Drive End Bearing	Priming Method
Cast Iron to BS1452 Grade 220	Cast Steel BS3100 1976GRBW 4 Hardened to 200 HB Brinell	Cast Iron to BS1452 Grade 220	Nickel Chrome Steel to BS 970 Grade M40 EN24T	Cast Iron to BS1452 Grade 220	Cast Iron	High Nitrile Rubber	Silicon Carbide vs Silicon Carbide	Taper Roller	Taper Roller	Air compressor / Dri-Prime system

Bearing Details

Notes: Alternative material specification available on request

Technical Details:

Suction:	6" (150mm) table 'D'	**Maximum Operating Temperature**	80 °C
Discharge:	6" (150mm) table 'D'	**Maximum Working Pressure**	4 Bar
Maximum Capacity	459 M3/hr	**Maximum Suction Pressure**	2 Bar
Maximum Head	35 Meters	**Maximum Test Pressure**	6 Bar
Maximum Solids handling:	65 mm	**Maximum Operating Speed**	2200 RPM
Impeller Type	Fully open	**Normal Operating Speed**	1500 RPM
Number of Blades	3	**Minimum Operating Speed**	1200 RPM
Maximum Impeller Diameter	280 mm	**Standard compressor absorbs**	3 KW

Diesel Set - Performance :

Perkins 404-22 18.5kw @ 1500RPM

Total Suction Head - Meters	Total Delivery Head 3	6	9	12	15
	Output M3/hr				
3.0	377	328	273	191	71
4.6	350	303	235	137	-
6.1	317	273	191	68	-
7.6	273	232	191	-	-

Impeller Dia: 250 mm

Performance data provided in tables is based on water tests at sea level and 20 deg c ambient.

Running Period :	16 Hours	Normal Operating speed
Fuel tank capacity	168 Litres	
Approximate weight	960 Kgs (DRY)	
	1097 Kgs (WET)	
Approximate Dimensions:	Length	1600 mm
	Width	1100 mm
	Height	1440 mm

Diesel Set - Performance :

Perkins 1104C-44T 65kw @ 2200RPM

Total Suction Head - Meters	Total Delivery Head 9	18	27	37	43
	Output M3/hr				
3.0	459	440	383	273	164
4.6	451	434	366	246	123
6.1	383	350	306	219	41
7.6	301	284	251	142	-

Impeller Dia: 275 mm

Performance data provided in tables is based on water tests at sea level and 20 deg c ambient.

Running Period :	15 Hours	Normal Operating speed
Fuel tank capacity	294 Litres	
Approximate weight	1570 Kgs (DRY)	
	1810 Kgs (WET)	
Approximate Dimensions:	Length	2572 mm
	Width	1273 mm
	Height	1682 mm

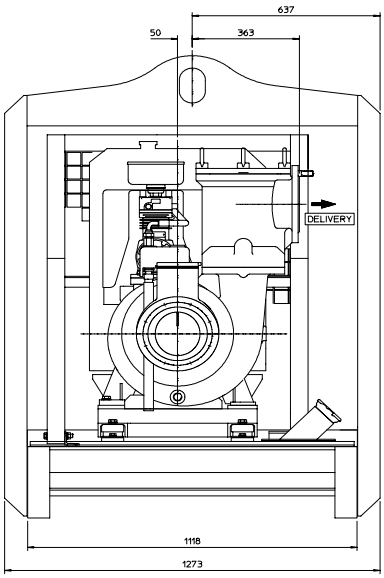

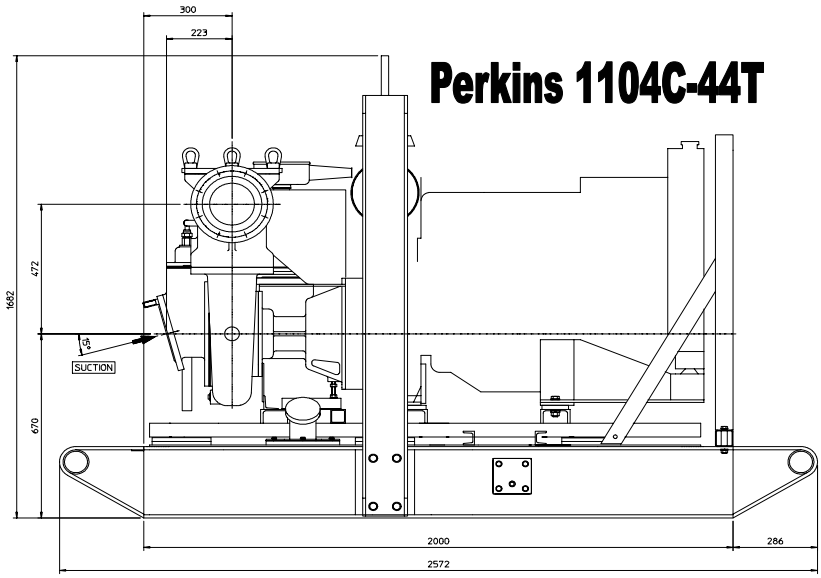

Alternative options available e.g. Highway trailer, Site Trolley, Silenced set etc. Please Contact Godwin Pumps Ltd for details.

Reference Number	CD150M_A
Issue	2

Godwin Pumps Limited
Quenington, Cirencester,
Gloucestershire GL7 5BX, England
Tel: 01285 750271 Fax: 01285 750352
E-mail: sales@godwinpumps.co.uk
Web Site www.godwinpumps.co.uk

Assessed to ISO 9001:2000
Certificate No. 224

godwin pumps

Specification and illustrations subject to revision without notice. All information is approximate and for general guidance only.
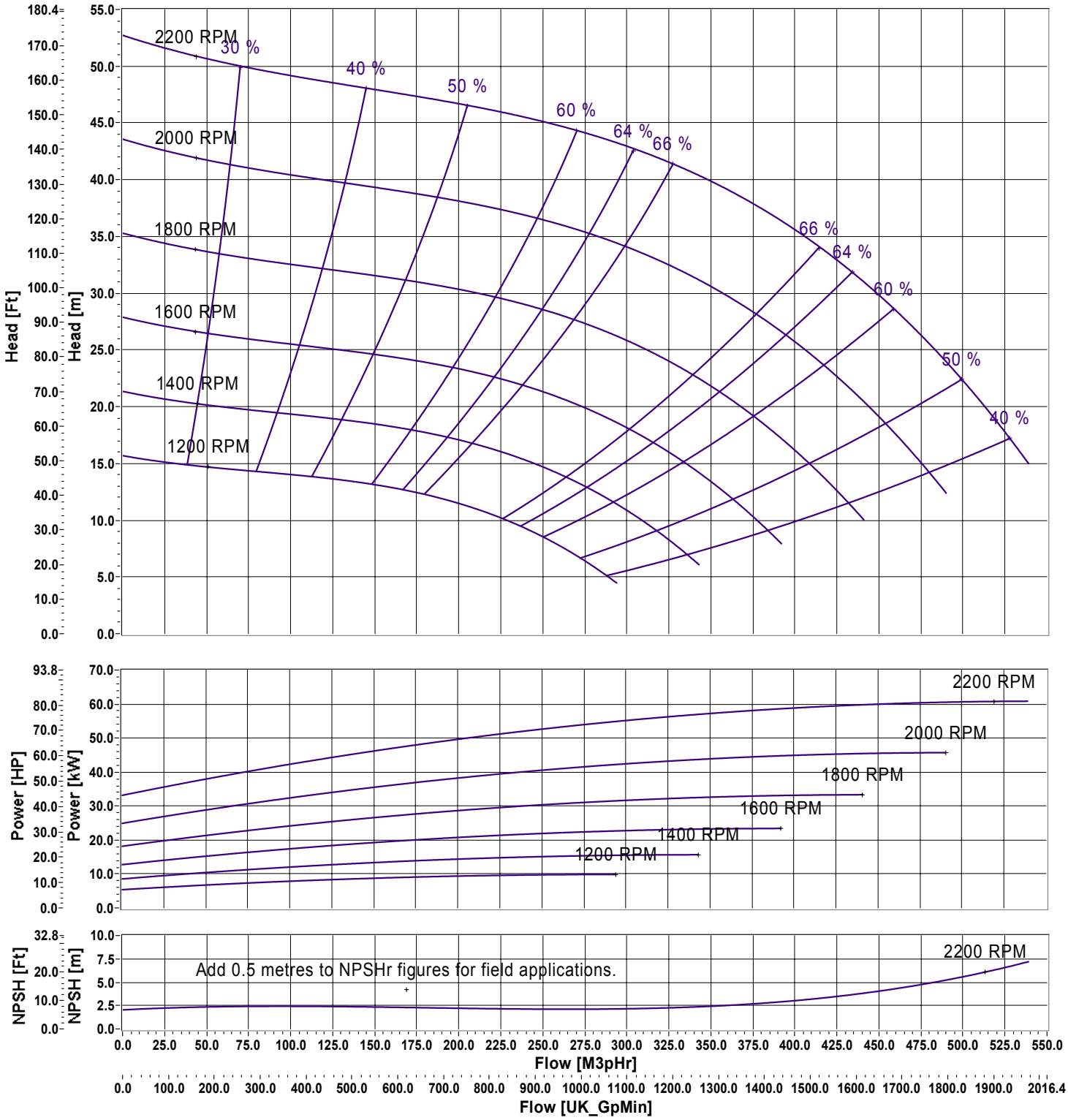
Pump Type	CD150M
Curve No	CD150M-VAR-280mm-10.06.04
Branch Sizes	150 x 150mm
Date	10.06.04
Speed	VARIABLE